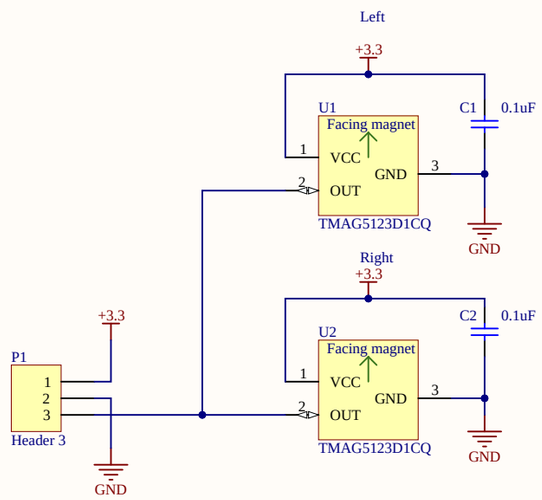

Title: *CRS RC car front encoder*			ETH Zurich Inst. Dynamic Systems & Control Sonneggstrasse 3 8092 Zurich SWITZERLAND
Project: CRS RC car	Rev: _1.0.0_	Drawn: 2022-02-02 MA	Checked: _missing_ _missing_
Sheet * of *	Printed: 28/03/2024 @ 14:23:51	Drawing Size: A3	
File: C:\Users\Marcus\Documents\Altium SVN\CRS RC car back Encoder\Main.SchDoc			